CCTV LENS

T12Z672M

MOTORIZED ZOOM LENS

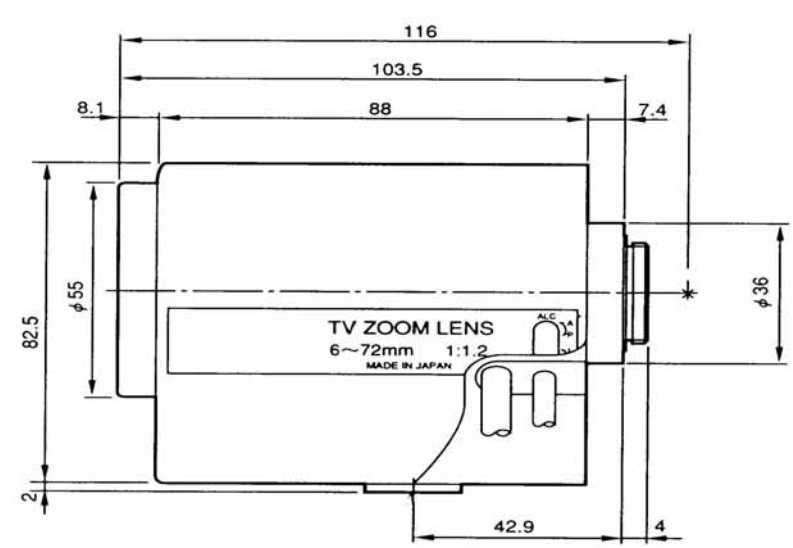

(Unit: mm)

Image Format	**1/3-inch**
Focal Length	**6 - 72mm**
Max. Aperture	**F1.2 - close**
Operation	**Iris: Motorized** **Zoom: Motorized** **Focus: Motorized**

View Angle (Degrees)

	Tele	Wide
Horizontal:	4°0	43°7
Vertical:	3°0	32°9
Diagonal:	5°0	54°4

Lens Mount	**CS-Mount**
MOD(Minimum Object Distance)	**1.5m**
Back Focal Length	**8.7mm**
Filter Screw Size	**Nil**
Dimensions	**66 x 82.5 x 103.5mm**
Weight	**620g**