CCTV LENS

TH10Z0880MA

MOTORIZED ZOOM LENS
AUTO IRIS

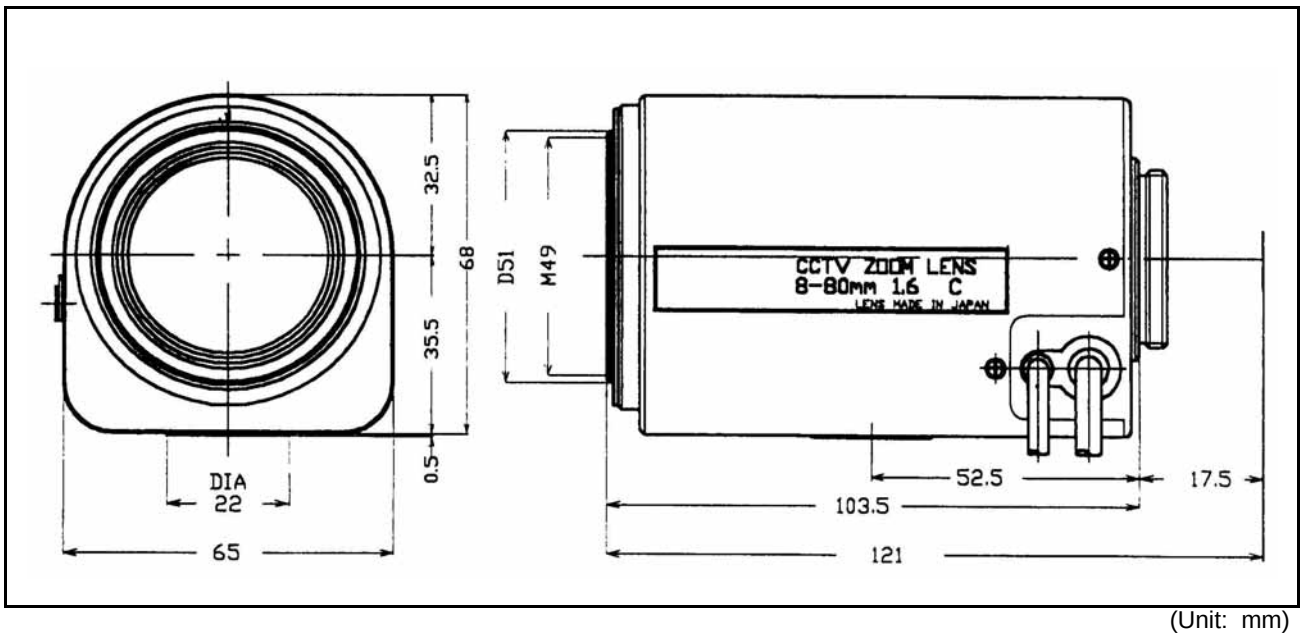

(Unit: mm)

Image Format	**1/2-inch**
Focal Length	**8 - 80mm**
Max. Aperture	**F1.4 - 360**
Operation	**Iris: Auto iris, Video-drive** **Zoom: Motorized** **Focus: Motorized**

View Angle (Degrees)

	Tele	Wide
Horizontal:	4°6	43°4
Vertical:	3°5	32°9
Diagonal:	5°6	54°0

Lens Mount	**C-Mount**
MOD(Minimum Object Distance)	**1.0m**
Back Focal Length	**14.74mm**
Filter Screw Size	**M49 P=0.75**
Dimensions	**65 x 68 x 103.5mm**
Weight	**455g**