MACHINE VISION LENSES

Optical axis converter
Pitch 8mm type

TYPE NO. :	**PAC08/16**	Acceptable lens diameter is 16mm.
	PAC80/18	Acceptable lens diameter is 18mm.

Using two of this converter, distance between two axes can be 8mm.

Dimensions:

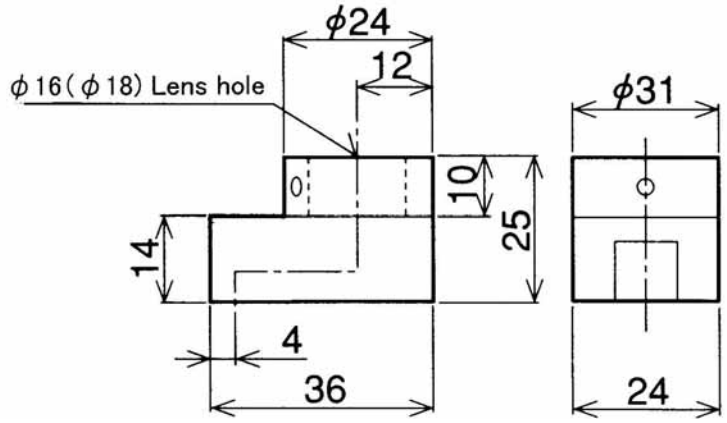

Inner optical path : 35mm

SPECIFICATIONS	

Tuss Vision, Inc.
Tokyo, Japan