MACHINE VISION LENSES

90-degree Prism
for 16mm diameter lens

TYPE NO. : **PS90D/16**

Dimensions:

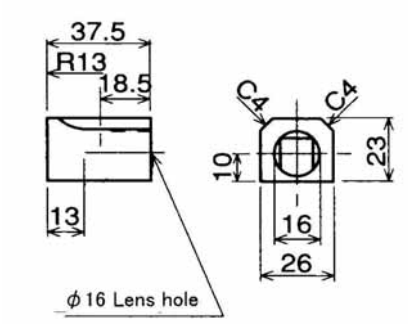

Inner optical path : 16mm

SPECIFICATIONS	

Tuss Vision, Inc.
Tokyo, Japan